INDUSTRIAL DIESEL ENGINE

KUBOTA 03-M-SERIES (3-cylinder)

D1803-M-E3B

EPA Int.Tier 4

EU Stage IIIA

RATED POWER

27.9 kW/2700 rpm

PERFORMANCE CURVE

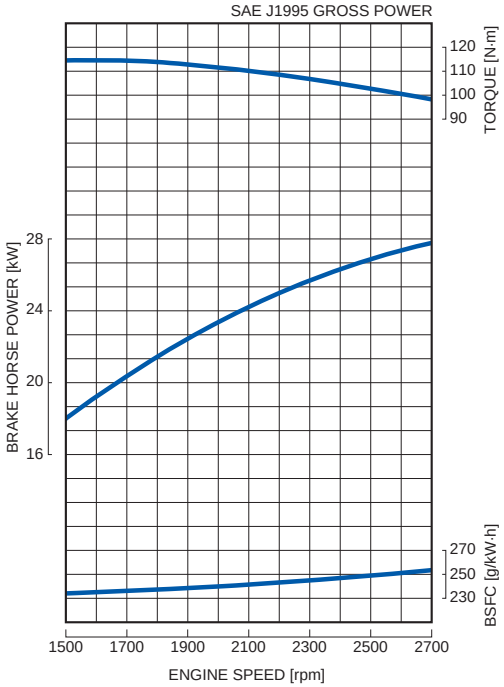

FEATURES with BENEFITS

Emissions

- The D1803-M engine complies with EPA Interim Tier 4 emissions regulations that are effective through the end of 2012. This engine also complies with EU Stage 3A requirements that are effective through 2012 and beyond in the European market.

Durable Power

- The Kubota 03-M-Series is well recognized for industrial applications. With numerous features such as a built-in solenoid, low fan position, and single side serviceability, this engine offers excellent performance characteristics and application flexibility.
- The cooling water passages between the cylinder bores, using Kubota's original casting technology as a countermeasure against heat load of high power density, provides both superior endurance and reliable engine characteristics.
- The D1803-M engine offers a seamless transition from Tier 2 to Interim Tier 4 by maintaining the same footprint and hard mounting points with only slight performance changes from the Tier 2 engine.

Clean and Quiet Power

- Kubota's original E-TVCS (Three Vortex Combustion System) has been improved. The airflow, combustion chamber and piston recess were optimized to provide a 50% lower particulate matter (PM) level, the same stringent level as above the 37kW-class (EPA Interim Tier 4).
- The half-float valve cover and MoS_2 coated pistons lower noise levels by 1.0-2.0 dBA over conventional diesel engines and provide reduced transmitted vibration from the valve area for better noise characteristics.

Option

- The Kubota 03-M-Series engines offer side power take-off(PTO), in response to the trend of increasing hydraulic control devices in industrial machines. It is possible to install a hydraulic pump at two side PTO locations.
- A Direct Injection engine is also available.

D1803-M-E3B

KUBOTA 03-M-SERIES

GENERAL SPECIFICATION

Model		D1803-M-E3B
Emission Regulation		Interim Tier 4 / Stage 3A
Type		Vertical 4-cycle Liquid Cooled Diesel
Number of Cylinders		3
Bore	mm (in)	87 (3.43)
Stroke	mm (in)	102.4 (4.03)
Displacement	L (cu.in)	1.826 (111.4)
Combustion System		Indirect Injection
Intake System		Naturally Aspirated
Maximum Speed	rpm	2700
Output: SAE J1995 Gross Power	kW	27.9
	hp	37.4
	ps	37.9
Direction of Rotation		Counterclockwise Viewed on Flywheel
Oil Pan Capacity	L (gal)	7.0 (1.85)
Starter Capacity	V-kW	12-2.0
Alternator Capacity	V-A	12-40
Length	mm (in)	575.9 (22.7)
Width	mm (in)	499.0 (19.6)
Height (1)	mm (in)	684.0 (26.9)
Height (2)	mm (in)	265.5 (10.5)
Dry Weight	kg (lb)	151.0 (332.9)

*Specification is subject to change without notice.
*Dry weight is according to Kubota's standard specification. When specification varies, the weight will vary accordingly.
*SAE J1995 Gross Power: 1-hour rating based on engine without cooling fan, air cleaner and muffler, with alternator.

DIMENSIONS

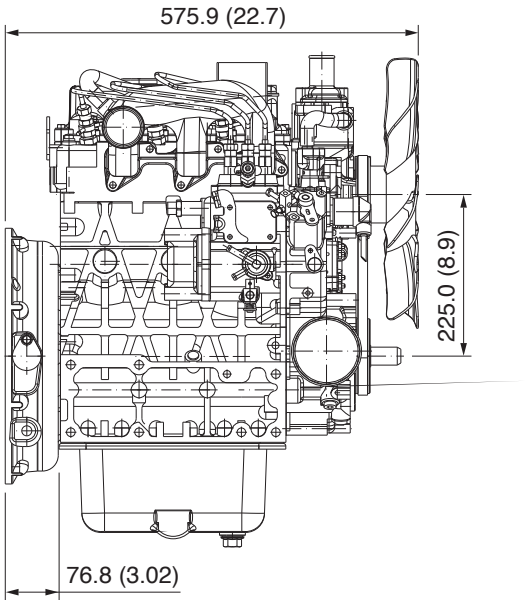

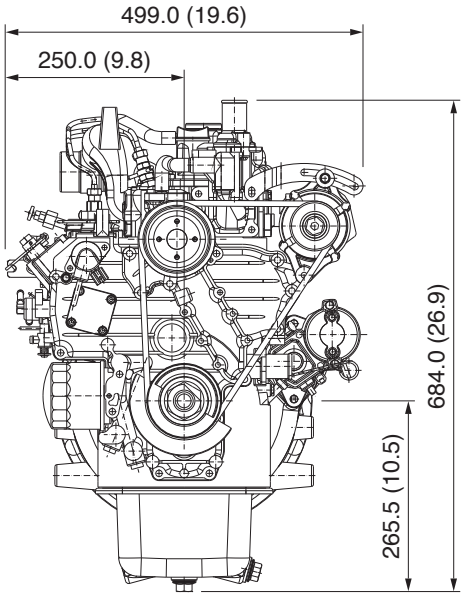

Kubota

Kubota Corporation

2-47, Shikitsuhigashi 1-chome, Naniwa-ku, Osaka, 556-8601 Japan
Fax: +81 (0) 6 6648 /35 21
http://engine.kubota.co.jp

AUTHORISED DEALER FOR ROMANIA:

mecanexim engineering

Mecanexim Engineering SRL
Str. Tudor Arghezi, nr.1
Comuna 1 Decembrie, judetul Ilfov
Telefon: +40 21 369 1340
Fax: +40 21 369 1341
eMail: office@mecanexim.ro
website: www.mecanexim.ro